Operating Manual Gearbox

- Economy gearboxes
- Precision gearboxes
- Application-specific gearboxes
- Modified gearboxes

PLE | PLQE | PLPE | PLHE | PLFE | PFHE
WPLE | WPLQE | WPLPE | WPLHE | WPLFE
PSBN | PSN | PLN | PSFN | PLFN
WPLN | WPSFN | WGN
NGV | NDF

DSS No.	100225283
DSS-Rev.	015
Date	06.05.2025

Contents

1 General information 4
1.1 Personnel qualification 4
1.2 Description of the gearbox 4
1.3 Intended use 5
1.4 Reasonably foreseeable misuse 5
1.5 Warnings 5
1.6 Contents and use of the operating manual 6
1.7 Further applicable documents 6
1.8 Modified gearboxes 6

2 Description of the gearbox 7
2.1 Nameplate 7
2.1.1 Nameplate with data matrix code 7
2.1.2 Nameplate with serial number 8
2.2 Lubrication with low temperature lubricant 8

3 Storage and transport 9
3.1 Bearings 9
3.2 Transport 9

4 Mounting 10
4.1 Attaching the motor to the gearbox by means of a clamping system (motor attachment) 10
4.1.1 Attaching the motor 11
4.1.2 Attaching the motor shaft with a clamping system 12
4.1.3 Determining the radial run-out, axial run-out and coaxiality tolerance of the motor 13
4.2 Attaching the motor to the gearbox by means of the drive pinion (direct motor mounting) 14
4.3 Attaching the drive unit to the gearbox by means of the drive shaft (free drive shaft) 15
4.4 Installing the gearbox in the application 17
4.4.1 Application side attachment to steel or aluminum 18
4.4.2 General tightening torques on the application side Mounting bolts 19
4.4.3 Modified gearboxes: Strength class of the application-side mounting bolts and use of washers 19
4.5 Radial and axial run-out of the gearbox shaft end 19

5 Commissioning and operation 21
5.1 Technical specifications 21
5.2 Initial operation (Commissioning) 21
5.2.1 Determining the lubricant service life 24
5.3 Operation 25
5.3.1 Remedying operational malfunctions 26
5.4 Inspection and maintenance 27
5.4.1 Inspection intervals and inspection measures 27
5.4.2 Maintenance operations 28
5.4.3 Safety data sheets 28

6 Disposal (instructions regarding hazardous substances, composition) 29

7 Service and manufacturer information 30
7.1 Service 30
7.1.1 Address and return shipments: 30
7.1.2 Locations in the USA and China 30
7.2 Manufacturer (company name and address) 30

1 General information

1.1 Personnel qualification

In particular, mounting, commissioning, operation, maintenance and disposal of the gearbox require qualified specialists who, due to their training, knowledge and experience in the field of mechanics and drive technology, are able to assess the work assigned to them, recognize possible hazards, particularly misuse, and take suitable preventive and protective measures.

1.2 Description of the gearbox

The gearbox has input and output shafts for the non-positive and positive mounting of electric motors. By means of mechanical transmission elements, speeds and torques are converted or transmitted by the drive and the output shaft in a form-fit, material-fit or friction-locked manner. The drive and output shaft can accommodate external loads.

The gearbox has a partially closed or closed housing.
The drive and the output shaft are usually freely accessible.

The geometric characteristics and performance data of the gearbox are described in its technical specifications.

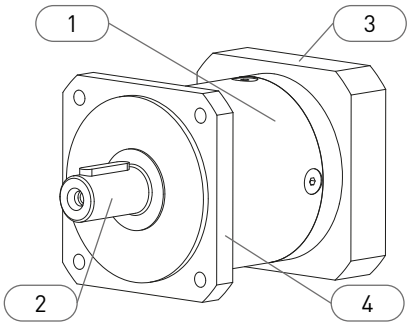

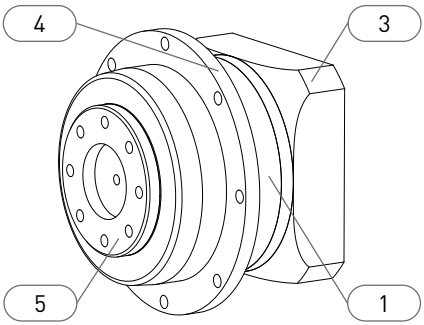

In the examples shown above, the following components of a planetary gearbox are described:

1 Gearbox housing
2 Output shaft
3 Drive flange
4 Output flange
5 Output shaft as flange output shaft

1.3 Designated use

The gearbox is intended exclusively for converting or transmitting torques, speeds and for absorbing radial or axial loads in accordance with its technical specifications. The gearbox may only be used for commercial and industrial reutilization.

1.4 Reasonably foreseeable misuse

Among other things, do not operate the gearbox in the following way:

- Without connecting element(s) on input or output shaft(s)
- Without monitoring and protective devices on the application side
- Outside the temperature range suitable for the lubricant
- Without consideration of the influence of the operating temperature on the lubricant service life
- In potentially explosive atmospheres
- Outside the performance data provided in the technical specifications

Furthermore, interventions through technical modifications or conversions are not permitted.

1.5 Warnings

Signal word	Explanation	Consequences of non-compliance
Warning!	Possible imminent danger to life and health	Serious injuries, including death
Attention!	Possible imminent danger of property or environmental damage	Damage to the drive system or its environment
Information	Very important information: Simplifies correct and safe installation and use of the gearbox	Can lead to undesired developments in the operating process

1.6 Content and use of the operating manual

This operating manual describes the conditions that must be met to ensure that the gearbox can be started up properly without adversely affecting the safety and health of persons. In addition, it contains specifications for all life phases of the gearbox. The operating manual is only complete when with the further applicable documents. If the operating manual refers to further applicable documents, these must be observed.

The gearboxes described in this operating manual are based on a risk assessment conducted in accordance with DIN EN ISO 12100: 2011-3.

1.7 Further applicable documents

- Technical specification (dimension spec sheet)
- Mounting instructions for the motor when mounted according to 4.1 as well as 4.2

1.8 Modified gearboxes

Modified gearboxes are based on the gearbox series listed on the title page, but have technical modifications. Modified gearboxes have a similar product code that begins with an „X“ (e.g. **X**PSN, **X**PLE), see Chapter 2.1.

Modified gearboxes may have different characteristics. These are documented in the technical specification of the respective gearbox. This operating manual is valid for the gearbox series listed on the title page as well as for modified gearboxes.

2 Description of the gearbox

2.1 Nameplate

The nameplate is affixed to the drive flange or the gearbox housing. For clear identification of the gearbox, the nameplate must also be legible at all times once installed in a machine or system. There are two different versions of the nameplate, which are explained in the following chapters 2.1.1 and 2.1.2.

2.1.1 Nameplate with data matrix code

The following figure shows, by way of example. the nameplate of a PLE series planetary gearbox with a data matrix code. The data matrix code links to the Online Service, where more detailed product information can be accessed.

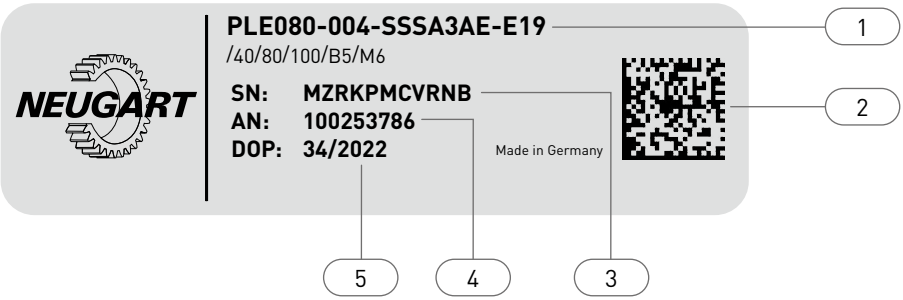

1 Product code (2 lines)
2 Data matrix code
3 Serial number
4 Article number
5 Production date: Calendar week / year

2.1.2 Nameplate with serial number

The following figure shows, by way of example, the nameplate of a planetary gearbox from the PSN series with serial number:

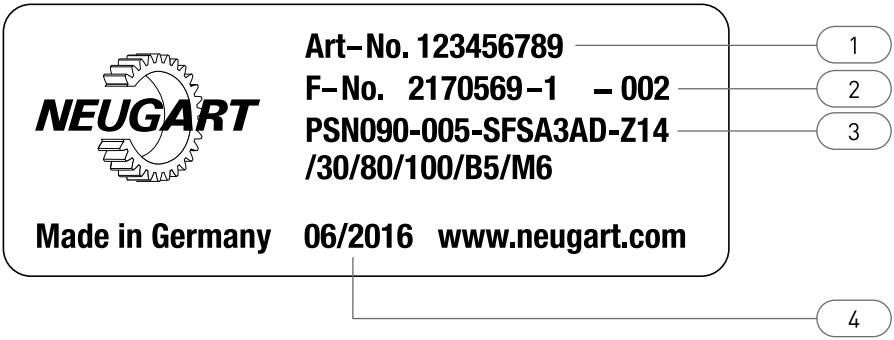

1 Article number
2 Serial number
3 Product code (2 lines)
4 Production date: Month / year

2.2 Lubrication with low-temperature lubricant

Please note that the use of a low-temperature lubricant leads to different performance data. For further details, please refer to the following diagram.

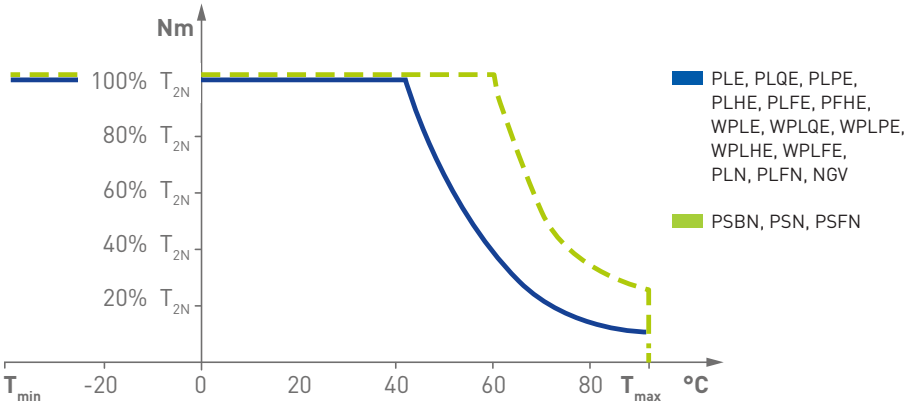

3 Storage and transport

3.1 Storage

Caution!

Improper storage can damage the gearbox. This can lead to premature aging of the lubricant and sealing elements, which can greatly reduce or shorten their service life or sealing effect.

- Choose a dry storage location to avoid corrosion.
- The long-term storage temperature must be kept between 0 C and +40 C because of the lubricant's storage life and the possibility of lubricant or seal aging.
- Direct sunlight or UV radiation accelerates the aging process of the seals and results in premature wear.
- To ensure lubricant serviceability, the storage period must not exceed 1 year.

3.2 Transport

Caution!

When lifting and moving the gearbox, there is a risk of it falling if it is not properly secured. When the gearbox is being moved, there is a pinch point hazard between the gearbox and other application components.

- Keep the gearbox weight and gearbox dimensions listed in its technical specifications in mind.
- The gearbox must be lifted by means of suitable lifting aids which wrap directly around the gearbox housing.

4 Mounting

Caution!

A damaged gearbox may no longer meet its technical specifications.

- The gearbox must not show any mechanical damage, corrosion, or lubricant leakage.
- The sealing elements must be protected from compressed air and aggressive cleaning agents. For cleaning, use cold cleaning agents based on a gasoline hydrocarbon.
- The mounting or removal of output elements or motors by means of striking, pressing or the like must be avoided in order to protect the bearings. Use pullers or heat connecting elements to be attached.
- Do not install a damaged gearbox in the application.
- Do not operate a damaged gearbox.

Caution!

The gearbox may no longer fully meet the warranted performance characteristics or the maximum permissible operating temperature may be exceeded if the materials used are not sufficiently thermally conductive or if the heat storage capacity is insufficient due to undersizing or the ventilation is inadequate.

- The application-side materials and sizing for connection geometries must be specified for sufficient heat flow and heat capacity (e.g. aluminum or steel and plate size equal to twice flange size).
- Ventilation must be ensured by convection or forced-air ventilation.

4.1 Attaching the motor to the gearbox by means of a clamping system (motor attachment)

Information

If the gearbox is prepared for mounting a motor by means of a clamping system, please refer to the mounting instructions supplied with the gearbox for detailed information on mounting the motor to the gearbox.

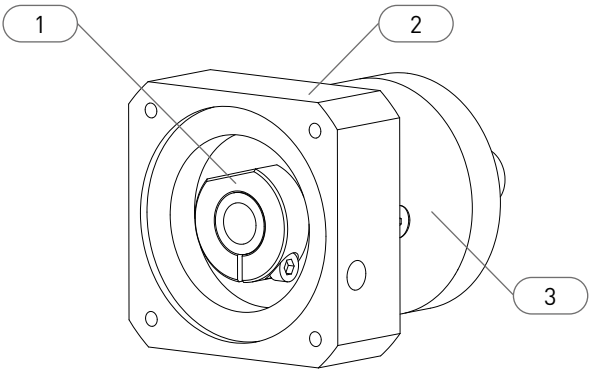

1 Clamping System
2 Drive flange
3 Gearbox housing

4.1.1 Attaching the motor

Warning!

Due to its weight, incorrect mounting or in the event of unacceptable deviation from radial run-out and axial run-out tolerances., the motor can cause a gear component or a connecting element to break. Among other things, this can result in a loss of position in the power train, uncontrolled rotation or a blocking of the output shaft.

- The permissible motor weight or bending moment given in the technical specification must be observed.
- The mounting instructions for motor mounting must be observed.
- Carefully clean the component surfaces to be used for non-positive connection and remove all residues.
- Radial run-out and axial run-out tolerances must be ensured when mounting a motor based on the values of the technical specification and the measuring method described in 4.1.3.1 to 4.1.3.5.
- Observe the bolt tightening torques of the motor manufacturer when fastening the motor.
- Select a suitable torque tool with a minimum accuracy to DIN EN ISO 6789-1 Type II A to ensure the required tightening torque.
- The bolts must be secured against self-loosening through use of a threadlocker (e.g. Loctite 245).

4.1.2 Attaching the motor shaft with a clamping system

Warning!

Insufficient cleaning of the friction-locked components or insufficient tightening torque (TAK) of the clamping screw can lead to slippage in the clamping system and to its failure. Excessive tightening torque of the clamping screw can lead to its breakage and thus to failure of the clamping system. This can result in uncontrolled rotation of the output shaft, among other things.

- The mounting instructions for motor mounting must be observed.
- To protect against plastic deformation, the clamping system must not be pre-loaded without the shaft installed.
- Carefully clean the component surfaces to be used for non-positive connection and remove all residues.
- Observe the specified tightening torque (TAK) in the mounting instructions to avoid slippage in the clamping system or breaking the clamping screw.
- Select a suitable torque tool with a minimum accuracy to DIN EN ISO 6789-1 Type II A to ensure the required tightening torque.

Warning!

A motor shaft diameter not matched to the clamping system can lead to slippage in the clamping connection and to its failure. This can result in uncontrolled rotation of the output shaft, among other things.

- Make sure that the tolerance of the motor shaft is matched to the gearbox.
- The tolerance for the motor shaft diameter can be found in the technical specifications.

Warning!

The clamping screw has specific characteristics. The use of a clamping screw other than the original screw can lead to failure of the clamping connection.

- Use only the original screw.
- Use only a replacement part provided by Neugart.

4.1.3 Determining the radial run-out, axial run-out and coaxiality tolerance of the motor

4.1.3.1 Radial run-out of the motor shaft end

The measuring probe is placed at the center of the shaft end. The maximum and minimum values are read on the measuring instrument by slowly rotating the shaft. The measurement may be performed with the motor in a horizontal or vertical position, with the measuring instrument mounted directly on the motor or on a common base plate for the motor and measuring instrument. The difference between these readings must not exceed the values given in the technical specifications of the gearbox.

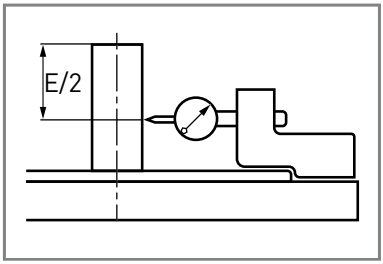

4.1.3.2 Coaxiality of flange centering with respect to the motor shaft

Using a fixture similar to the one shown in the picture,the measuring instrument is mounted on the shaft end at a distance of about 10 mm from the mounting surface of the flange. The maximum and minimum values are read on the measuring instrument by slowly rotating the shaft. It is recommended that the shaft be oriented vertically when performing this measurement. The difference between these readings must not exceed the values given in the technical specifications of the gearbox.

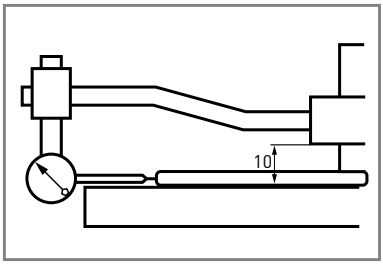

4.1.3.3 Axial run-out of the mounting surface of the flange with respect to the motor shaft

Using a fixture similar to the one shown in the picture,the measuring instrument is mounted on the shaft end at a distance of about 10 mm from the mounting surface of the flange. The maximum and minimum values are read on the measuring instrument by slowly rotating the shaft. It is recommended that the shaft be oriented vertically when performing this measurement. The difference between these readings must not exceed the values given in the technical specifications of the gearbox.

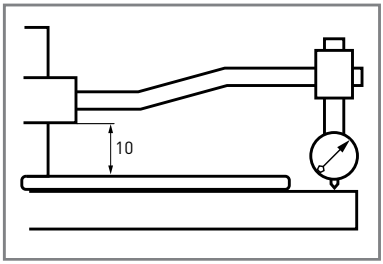

4.1.3.4 Radial run-out tolerance of the motor shaft

Nominal motor shaft diameter [mm]	Radial run-out tolerance [mm]	
	PLE, PLQE, PLPE, PLHE, PLFE, PFHE, WPLE, WPLQE, WPLPE, WPLFE, WPLHE, NGV	PSBN, PSN, PLN, PSFN, PLFN, WPLN, WPSFN, WGN, NDF
0 — ≤ 10	0.03	0.015
> 10 — ≤ 30	0.04	0.020
> 30 — ≤ 50	0.05	0.025
> 50 — ≤ 80	0.06	0.030

4.1.3.5 Axial run-out and coaxiality tolerance of the motor flange

Flange size/ Square measure [mm]	Axial runout and coaxiality tolerance [mm]	
	PLE, PLQE, PLPE, PLHE, PLFE, PFHE, WPLE, WPLQE, WPLPE, WPLFE, WPLHE, NGV	PSBN, PSN, PLN, PSFN, PLFN, WPLN, WPSFN, WGN, NDF
0 — ≤ 40	0.06	0.03
> 40 — ≤ 100	0.08	0.04
> 100 — ≤ 230	0.10	0.05
> 230 — ≤ 450	0.13	0.06

4.2 Attaching the motor to the gearbox by means of the drive pinion (direct motor mounting)

Information

If the gearbox is prepared for mounting a motor by means of a drive pinion directly connected to the motor shaft, please refer to the mounting instructions supplied with the gearbox for detailed information on mounting the motor to the gearbox or connecting the drive pinion to the motor shaft.

Warning!

Due to its weight, faulty mounting, a technically faulty connection between the motor shaft and drive pinion or in the event of impermissible deviation from the radial and axial run-out tolerances, the motor can cause breakage of torque-transmitting gearbox components or slip in the connection. This can result in uncontrolled rotation or blocking of the output shaft, among other things.

- The permissible motor weight or bending moment given in the technical specifications must be observed.
- The instructions for motor and drive pinion mounting must be followed.
- The radial and axial run-out tolerances required in the motor and drive pinion mounting instructions must be satisfied with the drive pinion attached.
- The design of the connection between the motor shaft and the drive pinion must ensure the performance data of the technical specifications.

4.3 Attaching the drive unit to the gearbox by means of the drive shaft (free drive shaft)

Information

If the gearbox is prepared for attachment of a drive unit by means of a drive shaft mounted on the gearbox, the same mounting specifications listed in 4.4 apply to the application connection on the input and output sides.

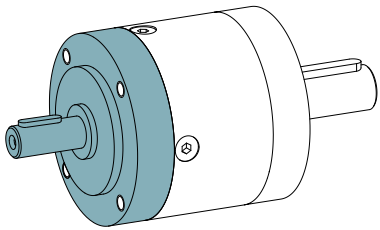

Warning!

Incorrect connection or pretensioning of the drive-side connecting element can cause breakage or slippage in the connection between the drive shaft and connecting element. This can result in breakage of a gear component or connecting element, loss of position in the power train, or premature bearing failure. This can result in uncontrolled rotation or blocking of the output shaft, among other things.

- If so indicated in the specifications, the gearbox must be connected to the application with the flange geometry shown on the input and output sides.
- The permissible external loads listed in the technical specifications must be observed.
- An uncontrolled introduction of external forces due to "overspecified" operating conditions (e.g. additional application-side bearings for the drive shaft, excessive belt tension when using a belt pulley) can lead to breakage of the drive shaft or failure of the gearbox bearings. Suitable connecting elements must be used and positional deviations must be avoided.

4.4 Installing the gearbox in the application

Warning!

Incorrect attachment to the application can lead to misalignment or slippage in the connection between the gearbox and application or gearbox shafts and connecting elements. This can lead to breakage of a gear component, a connecting element or loss of position in the power train, which can result in uncontrolled rotation or blocking of the output shaft, among other things.

- Observe the strength class of the application-side mounting bolts and possible use of washers according to 4.4.1
- Observe the tightening torques for the application-side mounting bolts and the requirements in 4.4.1 and 4.4.2
- Select a suitable torque tool with a minimum accuracy to DIN EN ISO 6789-1 Type II A to ensure the required tightening torque.
- The bolts must be secured against self-loosening through use of a threadlocker (e.g. Loctite 245).
- Non-positive connections must be made with suitable clamping sets and the appropriate fit according to the shaft fits given in the technical specifications in order to avoid slippage.
- Carefully clean the component surfaces to be used for non-positive connection and remove all residues.
- The application-side flange geometry must be free of damage and residues.
- Uncontrolled introduction of external forces due to "overspecified" operating conditions can lead to shaft breakage or failure of the gearbox bearings. Overspecified operating conditions can include positional deviations between the gearbox and the application, jamming in the case of direct connection to translational applications e.g. rack and pinion, additional application-side bearings for the input or output shaft or excessive pretensioning of belts. Suitable connecting elements must be used and positional deviations must be avoided.

4.4.1 Application side attachment to steel or aluminum

Table 4.4.1 shows the strength class to be used and the tightening torque for the application-side mounting bolts, as well as the use of washers for application-side attachment to steel or aluminum. For painted gearboxes, we recommend the use of washers to protect the paint layer.

					Application-side attachment to steel			Application-side attachment to aluminum		
Gearbox (sample image)	Series		Frame size	Bolt size	Mounting bolt strength class	Washer required	Tightening-torque [Nm]	Mounting bolt strength class	Washer required	Tightening-torque [Nm]
	PLE	WPLE	040	M4	10.9	no	3.8	10.9	yes	3.8
			060	M5	10.9	no	7.5	10.9	yes	7.5
			080	M6	10.9	no	12.9	10.9	yes	12.9
			120	M10	10.9	no	61	10.9	yes	61
			160	M12	12.9	no	123	12.9	yes	123
	PLQE		040	M3	12.9	yes	1.9	10.9	yes	1.6
		WPLQE	060	M5	12.9	yes	8.7	10.9	yes	7.5
			080	M6	12.9	no	15.1	10.9	no	12.9
			120	M8	12.9	yes	36	10.9	yes	31
	PSBN		055	M5	12.9	yes	8.7	10.9	yes	7.5
			070	M5	12.9	yes	8.7	10.9	yes	7.5
			090	M6	12.9	yes	15.1	10.9	yes	12.9
			115	M8	12.9	yes	36	10.9	yes	31
			142	M10	12.9	yes	72	10.9	yes	61
	PLPE	WPLPE	050	M4	12.9	no	4.4	12.9	yes	4.4
			070	M5	12.9	no	8.7	12.9	yes	8.7
			090	M6	12.9	no	15.1	12.9	yes	15.1
			120	M8	12.9	no	36	12.9	yes	36
			155	M10	12.9	no	72	12.9	yes	72
	PLHE	WPLHE	060	M5	12.9	yes	8.7	10.9	yes	7.5
			080	M6	12.9	no	15.1	10.9	no	12.9
			120	M8	12.9	no	36	10.9	no	31
	PLFE		055	M3	12.9	no	1.9	10.9	no	1.6
	PLFE PFHE	WPLFE	064	M4	12.9	no	4.4	10.9	no	3.8
			090	M5	12.9	no	8.7	10.9	no	7.5
			110	M5	12.9	no	8.7	10.9	no	7.5
	PSN		055	M5	12.9	no	8.7	10.9	no	7.5
	PSN PLN	WPLN WGN	070	M5	12.9	yes	8.7	10.9	yes	7.5
			090	M6	12.9	no	15.1	10.9	no	12.9
			115	M8	12.9	no	36	10.9	no	31
			142	M10	12.9	no	72	10.9	no	61
			190	M12	12.9	no	123	10.9	no	105
	PSFN		055	M3	12.9	no	1.9	10.9	no	1.6
	PSFN PLFN	WPSFN	064	M4	12.9	no	4.4	10.9	no	3.8
			090	M5	12.9	no	8.7	10.9	no	7.5
			110	M5	12.9	no	8.7	10.9	no	7.5
			140	M6	12.9	no	15.1	10.9	no	12.9
			200	M8	12.9	no	36	10.9	no	31

	NGV	064	M5	12.9	no	8.7	10.9	no	7.5
		090	M6	12.9	no	15.1	10.9	no	12.9
		110	M8	12.9	no	36	10.9	no	31
	NDF	090	M5	12.9	no	8.7	10.9	no	7.5

4.4.2 General tightening torques on the application side

	Tightening torques for the application-side mounting bolts [Nm]							
Strength class Mounting bolts	M3	M4	M5	M6	M8	M10	M12	M16
10.9	1.6	3.8	7.5	12.9	31	61	105	257
12.9	1.9	4.4	8.7	15.1	36	72	123	300

General conditions for establishing the tightening torques

- Design of bolted connection in accordance with VDI 2230
- The total coefficient of friction for thread and head support is μ_{total}=0.1
- Up to 90% of the bolt yield strength is used
- The max. permissible tightening torque minus the accuracy class of the mounting tool (the accuracy class of the mounting tool must satisfy DIN EN ISO 6789-1 Type II A at a minimum)

4.4.3 Modified gearboxes: Strength class of the application-side mounting bolts and use of washers

Table 4.4.3 shows the strength class of the application-side mounting bolts to be used for modified gearboxes, as well as the use of washers, for application-side attachment on steel or aluminum. For painted gearboxes, we recommend the use of washers to protect the paint layer.

	Material Gearbox side	Aluminum	Aluminum	Aluminum	Steel	Steel	Steel
	Design Gearbox side	Thread	Holes	Oblong holes	Thread	Holes	Oblong holes
Application side of steel	Strength class Mounting bolts	10.9	12.9	12.9	12.9	12.9	12.9
	Washer required	no	yes	yes	no	no	yes
Application side of aluminum	Strength class Mounting bolts	10.9	10.9	10.9	12.9	10.9	10.9
	Washer required	yes	yes	yes	yes	no	yes

4.5 Radial and axial run-out of the gearbox shaft end

Information

If the technical specifications include data on the radial and axial run-out of the output shaft, the measuring methods described below must be used. The measurement may be performed with the gearbox in the horizontal or vertical position, with the measuring instrument mounted directly on the gearbox or on a common base plate for the gearbox and measuring instrument. The maximum and minimum values are read on the measuring instrument by slowly rotating the shaft.

Radial run-out of the gearbox shaft end for stem shafts	Radial run-out of the gearbox shaft end for flanged shafts	Axial run-out of the gearbox shaft end for flanged shafts
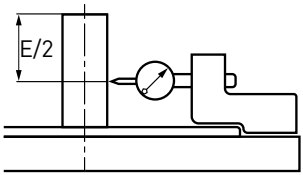	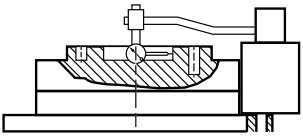	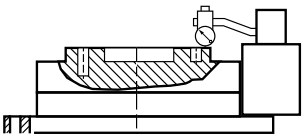
The measuring probe is placed at the center of the shaft end.	The measuring probe is placed at the center of the inner centering diameter of the flanged shaft.	The measuring probe is placed at the outer edge of the screw-on surface of the flanged shaft.

5 Commissioning and operation

5.1 Technical specifications

Information

The geometric characteristics and performance data of the gearbox are described in its technical specifications.

5.2 Initial operation (Commissioning)

Warning!

The direction of rotation of the gearbox can be the same or opposite. Failure to note the direction of rotation may result in an unexpected starting direction of the gearbox.

- Note the direction of rotation of the gearbox stated in its technical specifications.

Warning!

For the intended use, a gearbox has at least one freely accessible shaft through which pulling is possible.

- Only operate the gearbox with appropriate technical safeguards.
- Protective devices for the application that safeguard the area around the gearbox must not be disabled.

Warning!

When operating with an exposed feather key, the key can be thrown off as the result of high centrifugal forces.

- Do not operate the gearbox with the feather key exposed.
- Secure or remove the feather key.

Warning!

Due to its kinematic energy, the motor can cause torque-transmitting gearbox components to break in non-stationary operation. This can result in uncontrolled rotation or blocking of the output shaft, among other things.

- The maximum motor bending moment stated in the technical specifications must be observed.
- The maximum motor bending moment must be taken into account in the dynamic design in non-stationary operation.

Warning!

Exceeding the performance data given in the technical specifications can cause a gearbox component to break. This can result in uncontrolled rotation or blocking of the output shaft, among other things.

- During commissioning, the speeds, torques and external loads on the gearbox must correspond to the maximum load intended for subsequent operation.
- The gearbox may only be operated within its technical specifications with regard to speeds, torques, external loads and its operating temperature. Check in the technical specifications whether the performance data must be reduced as the gearbox temperature increases.
- Check for possible faults and malfunctions (including increased current consumption, vibration, temperature e.g. due to deposits or sluggishness, noise during operation, leakage, uncontrolled introduction of external forces and torques e.g. due to foreign bodies).

Warning!

Uncontrolled introduction of external forces and torques due, for example, to application-related impact and shock loads, emergency situations, foreign bodies in guides or between the pinion and rack can lead to breakage of gears, shafts, failure of gearbox bearings and leakage. This can result in uncontrolled rotation or blocking of the output shaft, among other things.

- Uncontrolled introduction of external forces and torques must be avoided.

Warning!

The gearbox surface may heat up during operation.

- Allow the gearbox to cool down sufficiently after shutdown.

Information

Unusually low temperatures can cause sealing elements to freeze. As a result, the gearbox can no longer fully meet warranted performance characteristics due to leakage.

- The gearbox may only be operated within its technical specifications with regard to the operating temperature.
- Ensure environmental conditions that prevent the sealing elements from freezing.

Information

Rotary shaft seals with a dust lip are initially greased between the sealing edge and the dust lip. Harmless apparent leakage may occur here during the first few hours of operation.

5.2.1 Determining the lubricant service life

Information

The expected service life of the lubricant depends on the gearbox temperature. The thermal suitability of the gearbox must be taken into account when selecting the gearbox. Using the lubricant beyond the service life can lead to premature wear of the gearbox.

- Determine the surface temperature in the thermally steady state for each load expected on the gearbox during operation.
- Check the surface temperature at several locations to determine the highest temperature. Expected differences with regard to the ambient temperature must be taken into account proportionally.
- Determine the lubricant temperature by adding 5 °C to the highest surface temperature measured.
- Define the expected or desired operating time t at the respective lubricant temperature determined.
- Check the lubricant as listed in the technical specifications and determine the range of the expected lubricant service life by means of the following diagram for the maximum and minimum characteristic curve of the lubricant used in each case.
- If different lubricant temperatures are present during operation, the total service life of the lubricant must be calculated using damage accumulation for each temperature range.

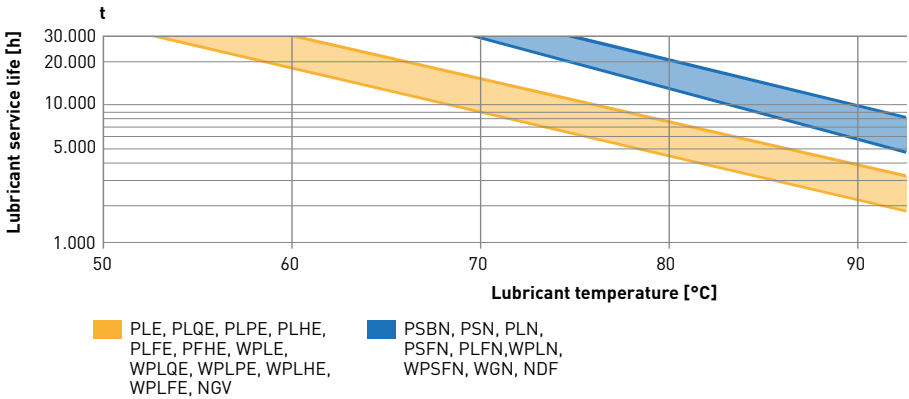

5.3 Operation

Warning!

Exceeding the performance data given in the technical specifications may cause a gearbox component to break. This can result in uncontrolled rotation or blocking of the output shaft, among other things.

- Changing the operating parameters of the gearbox may be possible only within the limits of the maximum values allowed during the commissioning.
- Check for possible defects and malfunctions. Among other things, this includes increased current consumption, vibration, temperature (e.g. due to deposits or sluggishness), noise during operation, uncontrolled introduction of external forces and torques (e.g. due to foreign bodies).

Warning!

In the event of contamination or deposits, the gearbox can no longer fully meet warranted performance characteristics.

- The gearbox must be protected against accumulation of dust and contamination, especially on the gearbox housing (heat buildup) and in the area of the seals (abrasive wear and leakage).

Warning!

Continuous loss of lubricant due to leakage can cause a gear component to break. This can result in uncontrolled rotation or blocking of the output shaft.

- Check for leakage.
- Replace the gearbox if you notice a continuous loss of lubricant.

5.3.1 Remedying operational malfunctions

Warning!

Tampering with the gearbox can lead to unintentional interruption of the power flow between the prime mover and the driven machine.

- It is not permitted to stay in the unsecured area around the gearbox (e.g. swivel range of a robot actuated by the gearbox nor stand under loads that are raised with the help of the gearbox).
- Observe the gearbox temperature and allow the gearbox to cool down if necessary.
- Secure the gearbox against unintentional startup or unintentional interruption of the power flow.
- When disconnecting the gearbox from the prime mover or driven machine, the gearbox must be disengaged from all loads. When disconnecting, any static torques still present in the power train or external loads on the gearbox must be taken into account.

5.3.1.1 Causes and remedies for possible fault states

Fault state	Possible causes	Potential solution
High operating temperature	Gearbox unsuitable for load	Compare the load with the technical specifications
	High ambient temperature	Ensure sufficient cooling by convection or forced-air ventilation Optimize heat conduction in the application
	Insufficient convection, heat conduction	
	Motor is heating the gearbox	Check load on the motor
	Deposits on the gearbox surface	Clean the gearbox surface
	Gearbox too close to a heat source	Shield the gearbox or relocate heat source
Loud noise during operation	Gearbox unsuitable for load	Compare the load with the technical specifications
	Gearbox damage (bearings, gearing, lubricant used up)	Contact our customer service
	Motor attachment or radial/axial run-out of the motor out of tolerance	Check radial/axial run-out of motor and remount motor

Fault state	Possible causes	Potential solution
Leakage	Leaking from initial lubrication	Monitor leakage. If lubricant leakage does not stop, contact customer service
	Leakage due to excessively greased bearing	
	Supposed leakage due to foreign medium	Check whether foreign medium is responsible for leakage
	Leakage due to worn seal (end of service life reached)	Contact customer service for inspection or maintenance. Order new product.
	Seal type unsuitable for load	Contact our customer service
	Gearbox damage (damaged seal)	
No power transmission / blockage	Gearbox unsuitable for load	Compare the load with the technical specifications
	Operating temperature too high	See potential remedy for fault condition "High operating temperature". Contact customer service.

5.4 Inspection and maintenance

5.4.1 Inspection intervals and inspection measures

Inspection interval	Inspection measures
during commissioning	Check for impurities, foreign bodies or foreign media, noise during operation, leakage, temperature Check the non-positive and positive connections
10 h after commissioning	Check for impurities, foreign bodies or foreign media, noise during operation, leakage, temperature Check the non-positive and positive connections
every 3 months	Check for impurities, foreign bodies or foreign media, noise during operation, leakage, temperature

- If contamination, foreign bodies or media are to be expected under the ambient conditions the regular inspection intervals must be shortened accordingly.

5.4.2 Maintenance operations

Information

The gearbox is maintenance-free during its expected service life. A rotary shaft seal installed on the gearbox is a wearing part and may need to be replaced.

- The sealing elements must be protected from compressed air and aggressive cleaning agents. For cleaning, use cold cleaning agents based on a gasoline hydrocarbon.
- Only clean the gearbox when it is at a standstill.
- Have shaft seals changed by customer service.
- Opening the gearbox for maintenance purposes is not permitted.

5.4.3 Safety data sheets

Information

The corresponding safety data sheet can be obtained from customer service or at www.neugart.com.

6 Disposal (instructions regarding hazardous substances, composition)

Information

The gearbox is made mainly of steel and aluminum materials.

- If possible, dispose of the gearbox lubricant separately, observing the relevant safety data sheet referenced in 5.4.3.
- If steel and aluminum components are not materially bonded, dispose of these materials separately if possible.
- Contact customer service if you have any questions.

7 Service and manufacturer information

7.1 Service

If you have any queries, please contact Neugart Service and have all details from the nameplate ready. For optimal handling of service, please contact the location from which the gearbox was purchased before shipping it back. We will gladly assist you with the return shipment. Alternatively, you can also use the service request available at the www.neugart.com website.

7.1.1 Address for return shipments

Neugart GmbH
Plant 2
Customer service
Keltenstraße 18
77971 Kippenheim
Germany

E-mail service@neugart.com
Phone +49 7825 847 - 3535
Fax +49 7825 847 - 433535
Internet www.neugart.com

7.1.2 Locations in the USA and China

If you have purchased a gearbox through the companies in the USA or China, you are also welcome to contact them for a pre-authorized service request for servicing at these locations.

Neugart USA Corp.
14325 South Lakes Drive
Charlotte, NC 28273
United States

E-mail sales@neugartusa.com
Phone +1 980 299-9800
Fax +1 980 299-9799

Neugart Planetary Gearboxes (Shenyang) Co., Ltd.
No. 152, 22nd road
E&T Development Zone Shenyang,
PC 110143
PR China

Email sales@neugart.net.cn
Telefon +86 024 25195797
Fax +86 024 25372552

7.2 Manufacturer (company name and address)

Neugart GmbH
Keltenstraße 16
77971 Kippenheim
Germany

Overview of revisions

Revision	Chapter	Reason for revision
013	1.8; 4.1.3; 4.4.1; 5.2.1	New chapter and addition NDF, PLQE040, PLFE055
014	4.4.1	Addition of new frame sizes: PSBN055, PSN055, PSFN055
015	1.2; 4.4.1	Content adjustments